Manufactured by:

Agri Drain CORPORATION

DRAINAGE SOLUTIONS, INC

(317) 346-4110
www.drainagesolutionsinc.com

Slide Gate Valves

Heavy-duty quality.

- Valve allows easy shut off of underground pipes.
- Must provide a stable base, and installation using flexible couplers is recommended.
- All parts are made out of super tough high-density PVC and high-quality stainless steel for maximum durability and corrosion resistance.
- Stubs are 4" long, SDR35 PVC Male.
- This product is not for use in lagoon or non-gravity flow applications.
- Valves are not pressure rated.
- Valves are intended for gravity flow: Low pressure and some seepage may occur.
- This product carries a 1-year warranty. Any modification to product will void the warranty.

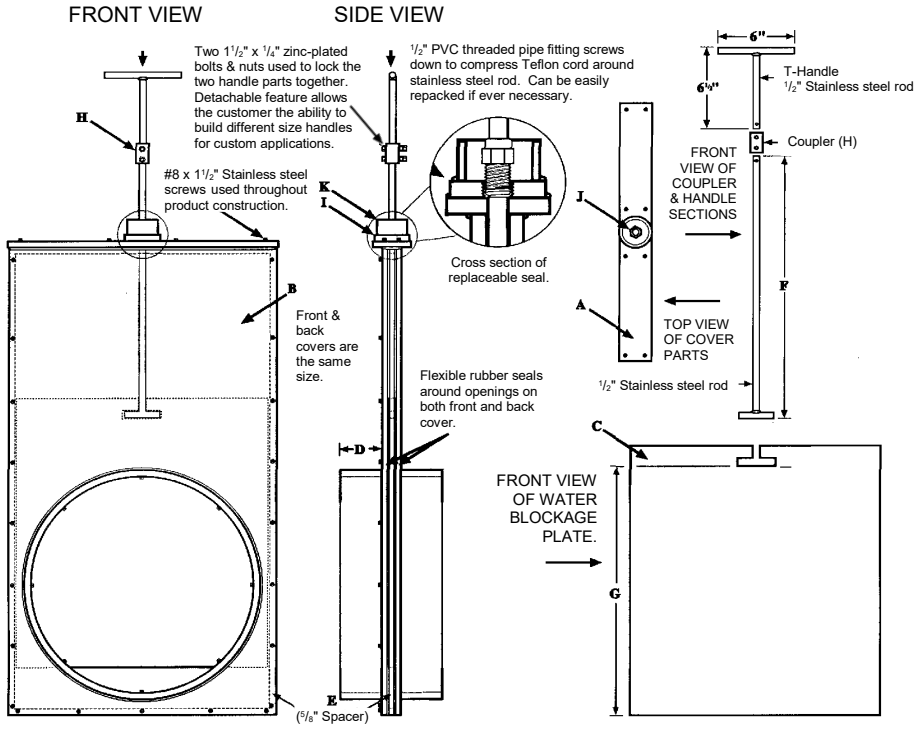

	A	B	C	D	E	F	G	H	I	J	K
15"	3 1/4" x 18"	17 3/4" x 35 3/4"	20 1/4" x 16 1/2"	4"	5/8"	26"	17 1/2"	Coupler 2" long x 1" OD x 1/2" ID pipe with 1/4" holes	1/2" PVC circle 2 3/4" threaded	1/2" CPVC male adapter	2" PVC DWV x 1 1/2"
18"	3 1/4" x 21 3/8"	21 1/4" x 42 1/2"	19 7/8" x 23 1/4"	4"	5/8"	26"	20 1/2"				

Extension Rods for Slide Gate Valves

- Extension Rod for 15" & 18" Valve
  - Available in 2' through 8' lengths. (Extension Rods over 4' are built in two pieces.)